YANMAR

PARTS CATALOG

0CD50-M00330EN

Last update May., 2021

PREFACE

This parts catalog is the 1st edition of 3TNM74F-SAFS for Briggs & Stratton.

Published : May, 2014

Contents

0CD50-M00330

Fig. No.	Fig. Name
3TNM74F-SAFS	
1.	CYLINDER BLOCK
2.	GEAR HOUSING
3.	MOUNTING FLANGE & OIL SUMP
4.	CYLINDER HEAD & BONNET
5.	EXHAUST MANIFOLD
6.	CAMSHAFT & DRIVING GEAR
7.	CRANKSHAFT & PISTON
8.	LUB. OIL SYSTEM
9.	COOLING WATER SYSTEM
10.	FUEL INJECTION PUMP
11.	GOVERNOR
12.	FUEL INJECTION VALVE
13.	FUEL FILTER
14.	STARTING MOTOR
15.	GENERATOR

Fig.1. CYLINDER BLOCK

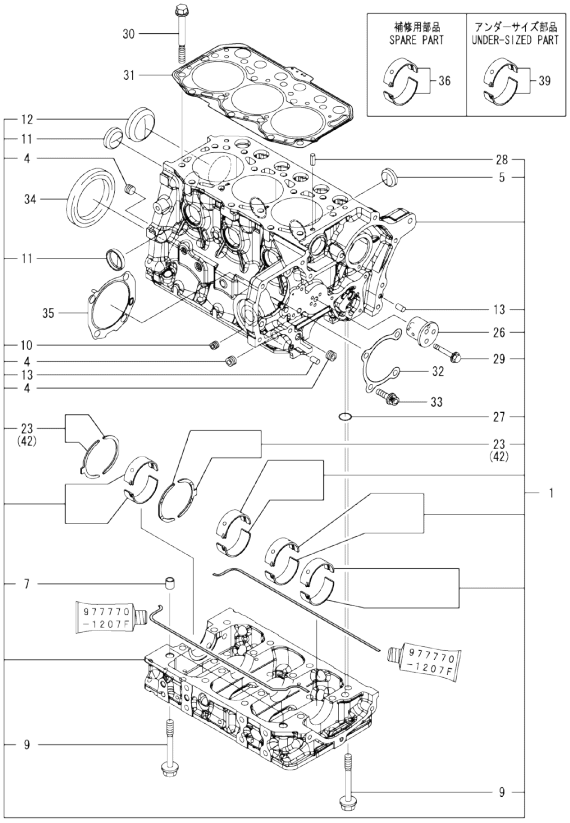

Remarks
(1)Spare parts.
(2)Under-sized(U.S.=0.25) parts.
(3)Over-sized(O.S.=0.25) parts.

(A)=3TNM74F-SAFS
(B)=
(C)=
(D)=
(E)=
(F)=

No.	Lev.	Parts No.	Description	Q'ty (A)	(B)	(C)	(D)	(E)	(F)	I	R
1	1	119D00-01560	BLOCK ASSY, CYLINDER	1							
4	2	124060-01050	PLUG, PT1/8	3							
5	2	119125-01970	PLUG, 25	3							
7	2	119125-01960	PIPE, KNOCK	2							
9	2	119125-02061	BOLT, METAL CAP	16							
10	2	23876-005000	PLUG, R005	1							
11	2	27241-300000	PLUG 30	4							
12	2	27241-450000	PLUG, 45	1							
13	2	119620-01620	PIN, M6X10	2							
23	2	119125-02930	BEARING, THRUST	2							
26	2	119125-25050	SHAFT, IDLE GEAR	1							
27	2	129900-32040	O-RING, P14	1							
28	2	22351-060012	PIN, SPRING 6.0X12	2							
29	2	26106-060402	BOLT, M6X 40 PLATED	3							
30	1	119810-01200	BOLT, HEAD	14							
31	1	119C10-01330	GASKET SET, HEAD	1							
32	1	119125-01790	GASKET	1							
33	1	119125-01800	FLANGE BOLT, M8X1.25	4							
34	1	119734-02220	SEAL, OIL	1							
35	1	119125-51800	GASKET	1							
36	1	119125-02900	BEARING, MAIN	4							1
39	1	119125-02910	BEARING, 0.25 US	4							2
42	1	119125-02940	BEARING, THRUST 0.25	2							3

N:Old ←Yes/No→ New. Q:Old ←No/Yes→ New. R:Old ←Yes/Yes→ New. S:Old ←No/No→ New. W:Add. Z:Discontinued. F:Interchangeable by set. K:Q'ty Change

Copyright (C) 2014 YANMAR GLOBAL CS CO., LTD. All RightsReserved.

Fig.2. GEAR HOUSING

(A)=3TNM74F-SAFS
(B)=
(C)=
(D)=
(E)=
(F)=

No.	Lev.	Parts No.	Description	Q'ty (A)	(B)	(C)	(D)	(E)	(F)	I	R
1	1	119025-01500	CASE, GEAR	1							
2	1	119125-01750	COVER	1							
3	1	119717-01800	SEAL, OIL	1							
4	1	26106-080352	BOLT, M8X 35 PLATED	8							
5	1	26106-080452	BOLT, M8X 45 PLATED	5							
6	1	106760-01770	CAP	1							
7	1	24311-000180	O-RING, 1AP18.0	1							

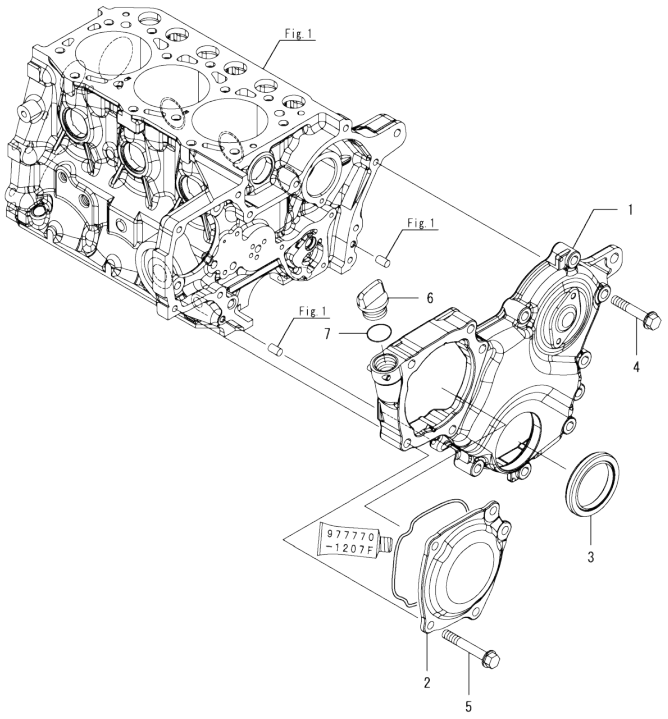

N:Old ←Yes/No→ New. Q:Old ←No/Yes→ New. R:Old ←Yes/Yes→ New. S:Old ←No/No→ New. W:Add. Z:Discontinued. F:Interchangeable by set. K:Q'ty Change

Copyright (C) 2014 YANMAR GLOBAL CS CO., LTD. All RightsReserved.

Fig.3. MOUNTING FLANGE & OIL SUMP

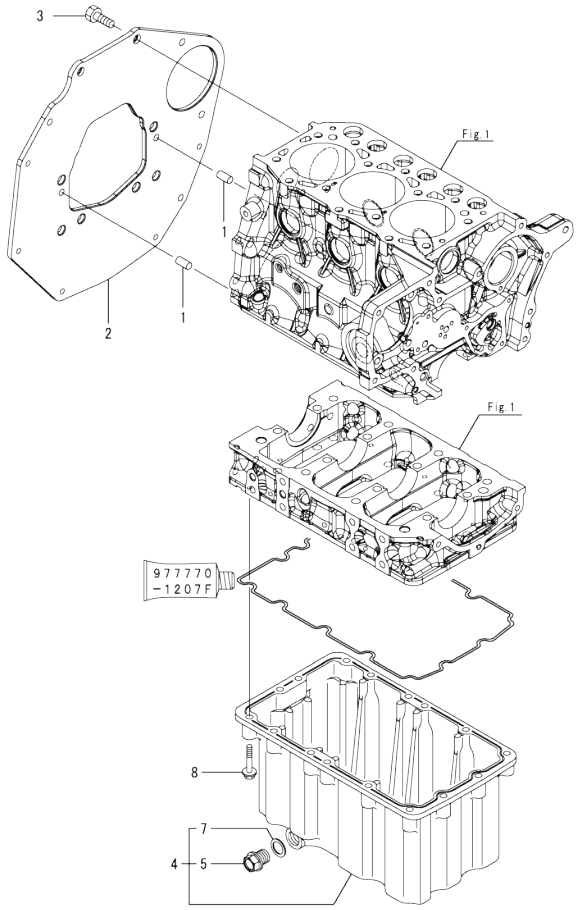

(A)=3TNM74F-SAFS (D)=
(B)= (E)=
(C)= (F)=

No.	Lev.	Parts No.	Description	Q'ty (A)	(B)	(C)	(D)	(E)	(F)	I	R
1	1	129100-01580	PIN, 8X16	2							
2	1	119127-01600	FLANGE, MOUNTING	1							
3	1	26206-100202	BOLT, M10X 20 PLATED	8							
4	1	119025-01760	SUMP ASSY, OIL	1							
5	2	119025-01690	PLUG, DRAIN 16	1							
7	2	22190-160002	WASHER, SEAL 16	1							
8	1	26106-060352	BOLT, M6X 35 PLATED	16							

N:Old ←Yes/No→ New. Q:Old ←No/Yes→ New. R:Old ←Yes/Yes→ New. S:Old ←No/No→ New. W:Add. Z:Discontinued. F:Interchangeable by set. K:Q'ty Change

Copyright (C) 2014 YANMAR GLOBAL CS CO., LTD. All RightsReserved.

Fig.4. CYLINDER HEAD & BONNET

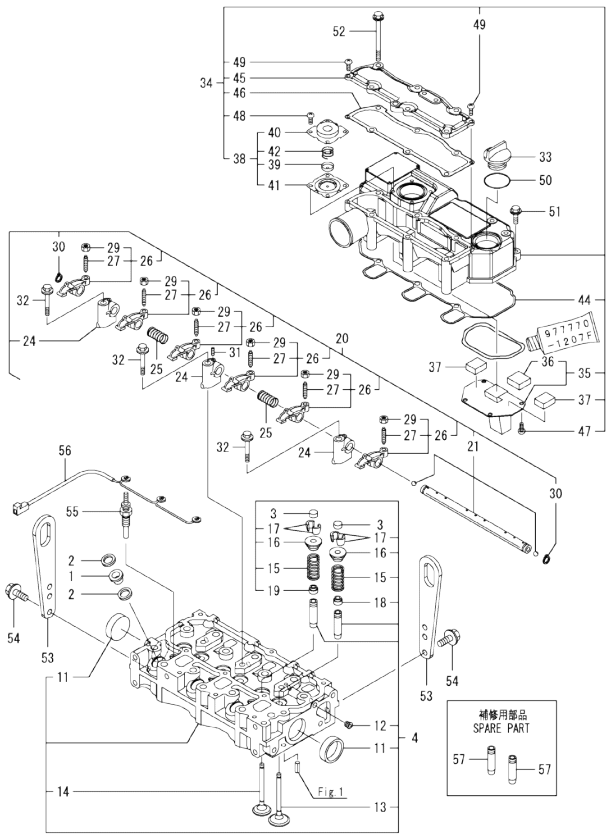

(A)=3TNM74F-SAFS
(B)=
(C)=
(D)=
(E)=
(F)=

No.	Lev.	Parts No.	Description	Q'ty (A)	(B)	(C)	(D)	(E)	(F)	I	R
1	1	129901-11450	PROTECTOR, NOZZLE	3							
2	1	119600-11460	GASKET, NOZZLE	6							
3	1	105010-11490	CAP, VALVE	6							
4	1	119D00-11740	HEAD ASSY, CYLINDER	1							
11	2	119285-11990	PLUG, 35	2							
12	2	23876-005000	PLUG, R005	1							
13	2	119C10-11100	VALVE, SUCTION	3							
14	2	119C10-11110	VALVE, EXHAUST	3							
15	2	119717-11131	SPRING, VALVE	6							
16	2	129508-11180	RETAINER, SPRING	6							
17	2	119717-11190	COTTER	12							
18	2	119717-11340	SEAL, VALVE STEM	3							
19	2	119717-11350	SEAL, VALVE STEM	3							
20	1	119515-11200	SUPPORT ASSY, ARM	1							
21	2	119515-11240	SHAFT ASSY, ROCKER	1							
24	2	119717-11260	SUPPORT, ROCKER ARM	3							
25	2	119515-11280	SPRING	2							
26	2	119717-11650	ARM, ROCKER	6							
27	3	129150-11230	SCREW, VALVE ADJUST	6							
29	3	129150-11750	NUT, M8	6							
30	2	22242-000120	RING, 12	2							
31	2	26979-050162	SCREW, M5X16	1							
32	1	26106-080402	BOLT, M8X 40 PLATED	3							
33	1	124160-01751	COVER, FILLER	1							
34	1	119515-11380	BONNET ASSY, HEAD	1							
35	2	119717-03031	PLATE	1							
36	3	119717-03070	BAFFLE, BREATHER	1							
37	2	119717-03070	BAFFLE, BREATHER	2							
38	2	119802-03100	DIAPHRAGM ASSY	1							
39	3	119802-03110	PLATE	1							
40	3	119802-03121	COVER, DIAPHRAGM	1							
41	3	119802-03131	DIAPHRAGM	1							
42	3	119802-03141	SPRING, DIAPHRAGM	1							
44	2	119515-11310	GASKET, BONNET	1							
45	2	119515-11320	COVER, BONNET	1							
46	2	119515-11330	GASKET	1							
47	2	22857-500100	SCREW, 5X10	4							
48	2	22857-500100	SCREW, 5X10	4							
49	2	22857-500160	SCREW, 5X16	2							
50	1	24311-000320	O-RING, 1AP32.0	1							
51	1	26106-060202	BOLT, M6X 20 PLATED	3							
52	1	26106-060752	BOLT, M6X 75 PLATED	6							
53	1	129900-07900	LIFTER	2							
54	1	26106-080162	BOLT, M8X 16 PLATED	4							
55	1	119717-77801	PLUG, GLOW	3							
56	1	119717-77820	CONNECTOR, GLOW PLUG	1							
57	1	119515-11800	GUIDE, VALVE	6							1

Remarks
(1)Spare parts.

N:Old $\xleftarrow[\text{No}]{\text{Yes}}$ New. Q:Old $\xleftarrow[\text{Yes}]{\text{No}}$ New. R:Old $\xleftarrow[\text{Yes}]{\text{Yes}}$ New. S:Old $\xleftarrow[\text{No}]{\text{No}}$ New. W:Add. Z:Discontinued. F:Interchangeable by set. K:Q'ty Change

Copyright (C) 2014 YANMAR GLOBAL CS CO., LTD. All RightsReserved.

Fig.5. EXHAUST MANIFOLD

(A)=3TNM74F-SAFS
(B)=
(C)=
(D)=
(E)=
(F)=

No.	Lev.	Parts No.	Description	Q'ty (A)	(B)	(C)	(D)	(E)	(F)	I	R
1	1	119718-13100	MANIFOLD, EXHAUST	1							
2	1	119717-13110	GASKET	1							
3	1	119717-13600	STUD, M8X50	2							
4	1	119802-13620	BOLT, M8X50	4							
5	1	119131-18320	STUD, M8X22	4							
6	1	26306-080002	NUT, M8	2							
7	1	119515-13200	GASKET, SILENCER	1							

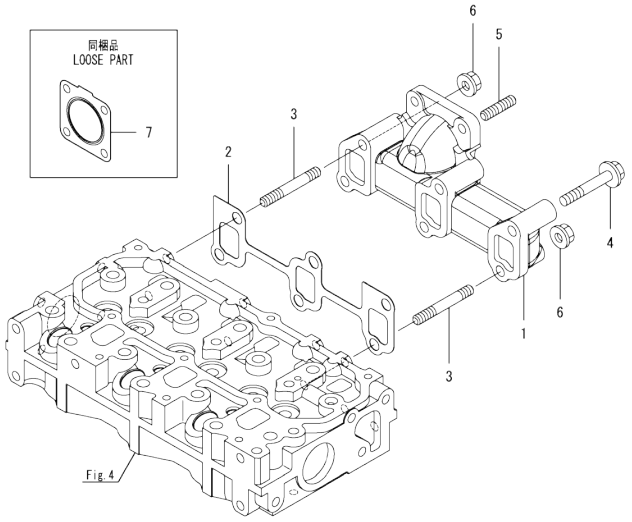

N:Old ◄Yes/No► New. Q:Old ◄No/Yes► New. R:Old ◄Yes/Yes► New. S:Old ◄No/No► New. W:Add. Z:Discontinued. F:Interchangeable by set. K:Q'ty Change

Copyright (C) 2014 YANMAR GLOBAL CS CO., LTD. All RightsReserved.

Fig.6. CAMSHAFT & DRIVING GEAR

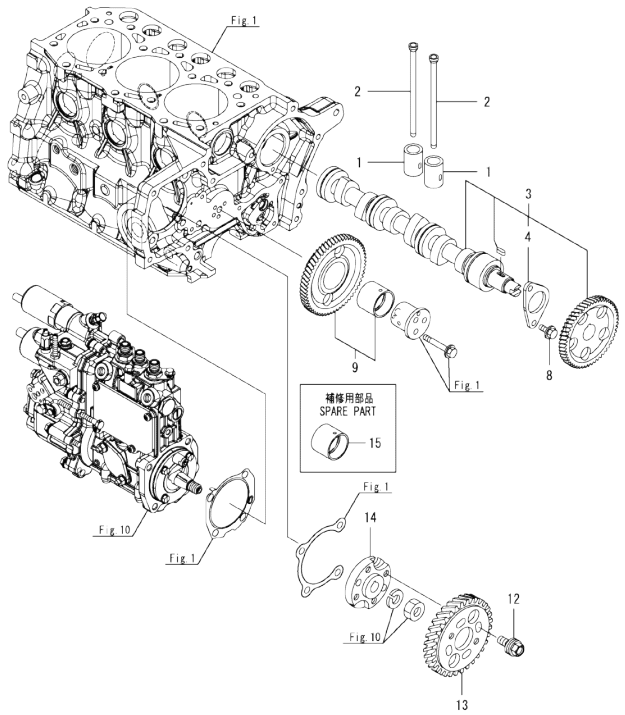

(A)=3TNM74F-SAFS (D)=
(B)= (E)=
(C)= (F)=

No.	Lev.	Parts No.	Description	Q'ty (A)	(B)	(C)	(D)	(E)	(F)	I	R
1	1	119620-14200	TAPPET	6							
2	1	119515-14400	ROD, PUSH	6							
3	1	119025-14580	CAMSHAFT ASSY	1							
4	2	119620-02450	BEARING, THRUST	1							
8	1	26106-060122	BOLT, M6X 12 PLATED	2							
9	1	119025-25100	GEAR ASSY, IDLE	1							
12	1	129150-25301	BOLT	4							
13	1	119125-25930	GEAR, PUMP	1							
14	1	119717-51150	FLANGE	1							
15	1	119125-25910	BUSH, IDLE GEAR	1							1

Remarks
(1)Spare parts.

N:Old $\frac{\text{Yes}}{\text{No}}$ New. Q:Old $\frac{\text{No}}{\text{Yes}}$ New. R:Old $\frac{\text{Yes}}{\text{Yes}}$ New. S:Old $\frac{\text{No}}{\text{No}}$ New. W:Add. Z:Discontinued. F:Interchangeable by set. K:Q'ty Change

Copyright (C) 2014 YANMAR GLOBAL CS CO., LTD. All RightsReserved.

Fig.7. CRANKSHAFT & PISTON

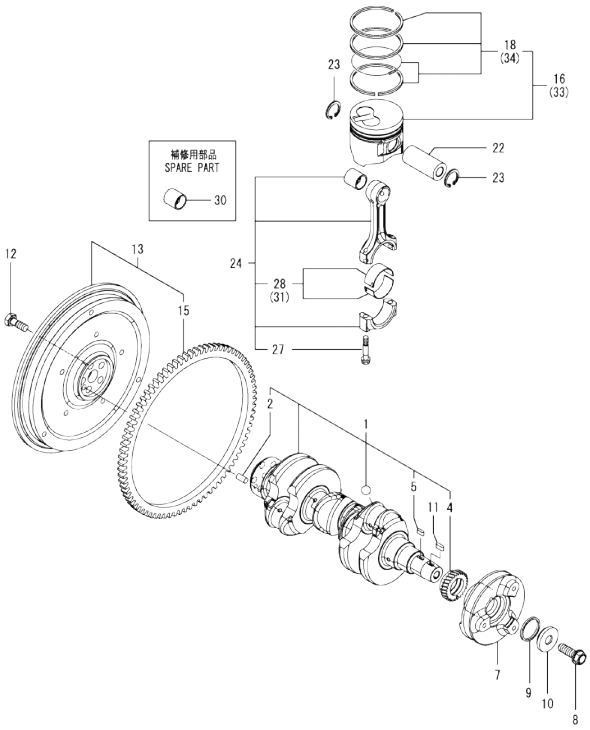

(A)=3TNM74F-SAFS
(B)=
(C)=
(D)=
(E)=
(F)=

No.	Lev.	Parts No.	Description	Q'ty (A)	(B)	(C)	(D)	(E)	(F)	I	R
1	1	119D00-21700	CRANKSHAFT ASSY	1							
2	2	129100-01580	PIN, 8X16	1							
4	2	119125-21200	GEAR, CRANKSHAFT	1							
5	2	22512-040120	KEY, 4X 12	1							
7	1	119125-21660	V-PULLEY	1							
8	1	119621-21681	BOLT, FLANGE 12X1.25	1							
9	1	119C10-21930	PACKING, WASHER	1							
10	1	119C10-21940	WASHER, V-PULLEY	1							
11	1	22512-050120	KEY, 5X 12	1							
12	1	119620-21500	BOLT, FLYWHEEL	5							
13	1	119025-21570	FLYWHEEL ASSY	1							
15	2	124060-21600	GEAR, RING	1							
16	1	119D00-22080	PISTON ASSY	3							
18	2	119C10-22500	RING ASSY	3							
22	1	119717-22300	PIN, PISTON	3							
23	1	22252-000220	RING, 22	6							
24	1	119515-23000	ROD ASSY, CONNECTING	3							
27	2	119717-23200	BOLT, CONNECTING ROD	6							
28	2	119515-23601	BEARING, CRANK PIN	3							
30	1	119717-23910	BEARING, PISTON PIN	3							1
31	1	119515-23611	METAL ASSY, 0.25	3							2
33	1	119D00-22900	PISTON ASSY, 0.25 OS	3							3
34	2	119C10-22550	RING ASSY ,0.25	3							3

Remarks
(1)Spare parts.
(2)Under-sized(U.S.=0.25) parts.
(3)Over-sized(O.S.=0.25) parts.

N:Old $\frac{\text{Yes}}{\text{No}}$ New. Q:Old $\frac{\text{No}}{\text{Yes}}$ New. R:Old $\frac{\text{Yes}}{\text{Yes}}$ New. S:Old $\frac{\text{No}}{\text{No}}$ New. W:Add. Z:Discontinued. F:Interchangeable by set. K:Q'ty Change

Copyright (C) 2014 YANMAR GLOBAL CS CO., LTD. All RightsReserved.

Fig.8. LUB. OIL SYSTEM

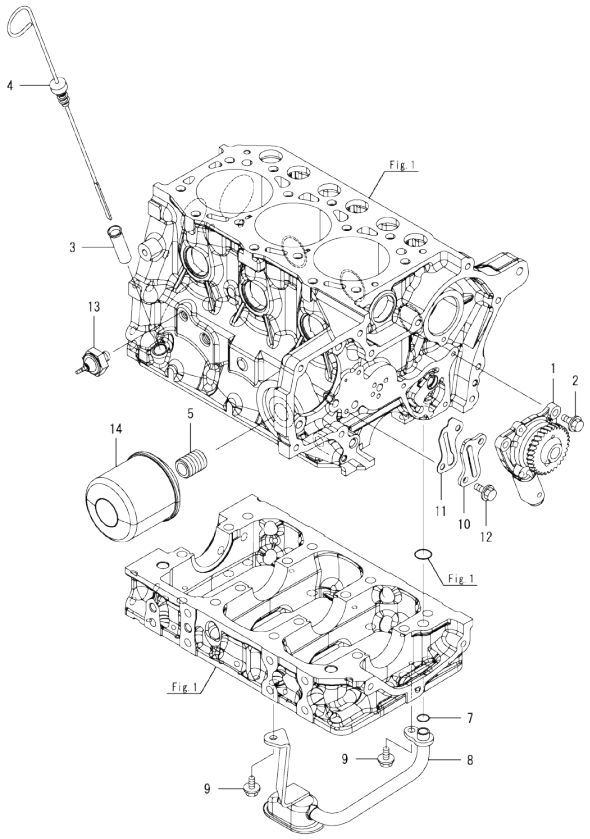

(A)=3TNM74F-SAFS
(B)=
(C)=
(D)=
(E)=
(F)=

No.	Lev.	Parts No.	Description	Q'ty (A)	(B)	(C)	(D)	(E)	(F)	I	R
1	1	119125-32000	PUMP ASSY, OIL	1							
2	1	26106-060142	BOLT, M6X 14 PLATED	3							
3	1	119125-34810	GUIDE, DIPSTICK	1							
4	1	119027-34830	DIPSTICK	1							
5	1	119717-35140	BOLT	1							
7	1	119209-35030	O-RING, P11	1							
8	1	119028-35080	PIPE ASSY, OIL INLET	1							
9	1	26106-060102	BOLT, M6X 10 PLATED	2							
10	1	119125-39200	COVER	1							
11	1	119125-39220	GASKET	1							
12	1	26106-060122	BOLT, M6X 12 PLATED	2							
13	1	114250-39450	SWITCH, 0.5KG	1							
14	1	119305-35151	FILTER ASSY, D68XL65	1							1

Remarks
(1)Spare parts.

N:Old ←Yes/No→ New. Q:Old ←No/Yes→ New. R:Old ←Yes/Yes→ New. S:Old ←No/No→ New. W:Add. Z:Discontinued. F:Interchangeable by set. K:Q'ty Change

Copyright (C) 2014 YANMAR GLOBAL CS CO., LTD. All RightsReserved.

Fig.9. COOLING WATER SYSTEM

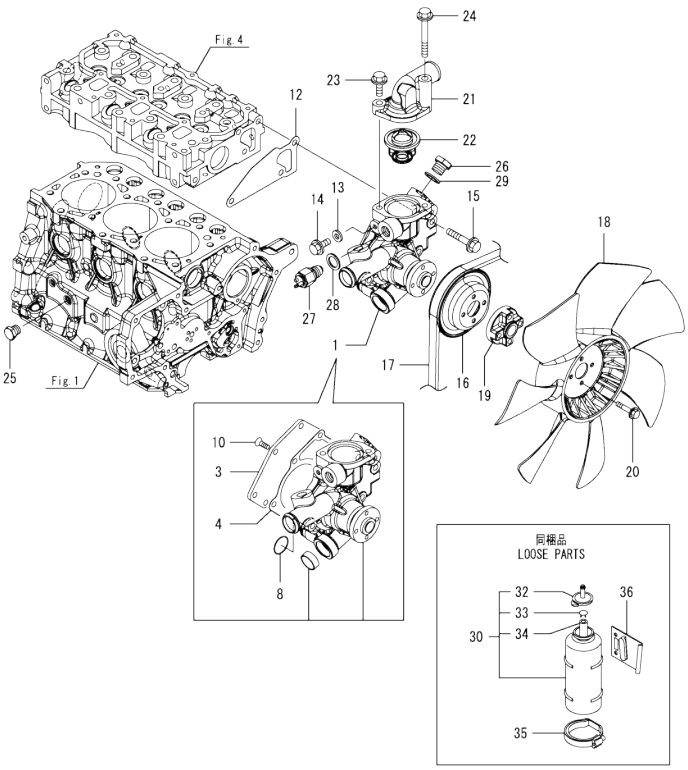

(A)=3TNM74F-SAFS
(B)=
(C)=
(D)=
(E)=
(F)=

No.	Lev.	Parts No.	Description	Q'ty (A)	(B)	(C)	(D)	(E)	(F)	I	R
1	1	119025-42000	PUMP ASSY, WATER	1							
3	2	119025-42020	COVER	1							
4	2	119025-42030	GASKET, WATER PUMP	1							
8	2	119685-42281	O-RING	1							
10	2	26577-060122	SCREW, M6X12	5							
12	1	119515-42020	GASKET, WATER PUMP	1							
13	1	23414-080000	GASKET, 8X1.0	1							
14	1	26106-080122	BOLT, M8X 12 PLATED	1							
15	1	26106-080452	BOLT, M8X 45 PLATED	3							
16	1	119717-42350	V-PULLEY, D=100	1							
17	1	25132-003500	V-BELT, A35	1							
18	1	119717-44740	FAN, COOLING D335X7	1							
19	1	121267-44760	SPACER	1							
20	1	26106-060302	BOLT, M6X 30 PLATED	4							
21	1	124101-49531	COVER, THERMOSTAT	1							
22	1	119717-49800	THERMOSTAT, 71	1							
23	1	26106-080252	BOLT, M8X 25 PLATED	1							
24	1	26106-080652	BOLT, M8X 65 PLATED	1							
25	1	171056-49120	PLUG, DRAIN	1							
26	1	121450-42450	PLUG, M16	1							
27	1	121250-44901	SWITCH, 110	1							
28	1	124465-44950	GASKET, 16	1							
29	1	124465-44950	GASKET, 16	1							
30	1	124450-44510	TANK ASSY, SUB	1							
32	2	124450-44530	CAP	1							
33	2	124450-44560	RETAINER	1							
34	2	23061-070230	PIPE, 7X 230	1							
35	1	124450-44550	BAND	1							
36	1	121256-44600	BRACKET, SUB TANK	1							

N:Old ←Yes/No→ New. Q:Old ←No/Yes→ New. R:Old ←Yes/Yes→ New. S:Old ←No/No→ New. W:Add. Z:Discontinued. F:Interchangeable by set. K:Q'ty Change

Copyright (C) 2014 YANMAR GLOBAL CS CO., LTD. All RightsReserved.

Fig.10. FUEL INJECTION PUMP

(A)=3TNM74F-SAFS
(B)=
(C)=
(D)=
(E)=
(F)=

No.	Lev.	Parts No.	Description	Q'ty (A)	(B)	(C)	(D)	(E)	(F)	I	R
1	1	719D25-51300	FIE ASSY	1							1
5	2	129155-51020	STUD	2							
8	2	122710-51090	KEY	1							
18	2	129155-51280	O-RING, S6	1							
31	2	129155-51400	DEFLECTOR	1							
32	2	158600-51410	PLUG, DEFLECTOR	1							
33	2	119717-51420	O-RING	1							
34	2	158600-51420	PLUG, DEFLECTOR	1							
43	2	158600-51570	PLUG	1							
44	2	129155-51580	O-RING	1							
77	2	119125-51700	COVER	1							
78	2	119717-51711	GASKET	1							
79	2	119717-51750	COVER	1							
80	2	119717-51761	GASKET	1							
81	2	158600-51790	STOOPER, RACK	1							
83	2	22190-160002	WASHER, SEAL 16	1							
84	2	22217-120000	WASHER, SPRING 12	1							
85	2	22351-050010	PIN, SPRING 5.0X10	2							
89	2	26022-050122	SCREW, M5X12	8							
91	2	26716-120002	NUT, M12	1							
94	2	119717-51860	NUT, M6	2							
97	2	129155-52051	GASKET	1							
98	2	129100-52200	COVER	1							
100	1	119D00-51250	SUPPORT,FOP	1							
101	1	26106-080162	BOLT, M8X 16 PLATED	1							
102	1	26106-080162	BOLT, M8X 16 PLATED	1							

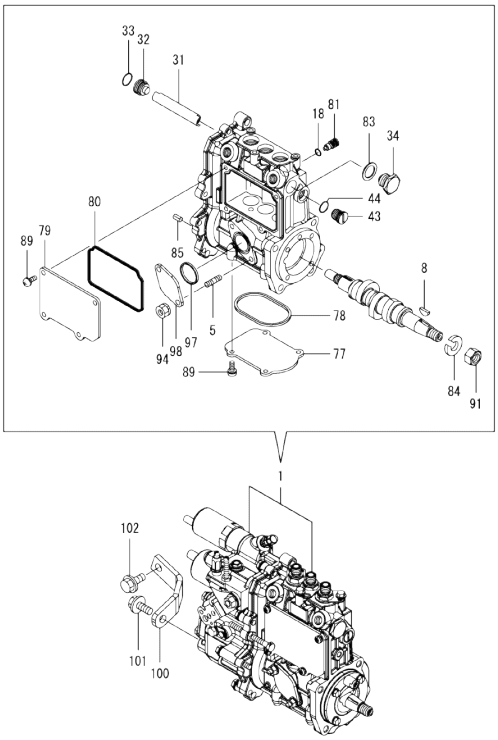

Remarks
(1)Governor(Fig.11) is incorporated in this Fuel Injection Pump(No.1).

N:Old ←Yes/No→ New. Q:Old ←No/Yes→ New, R:Old ←Yes/Yes→ New. S:Old ←No/No→ New. W:Add. Z:Discontinued. F:Interchangeable by set. K:Q'ty Change

Copyright (C) 2014 YANMAR GLOBAL CS CO., LTD. All RightsReserved.

Fig.11. GOVERNOR

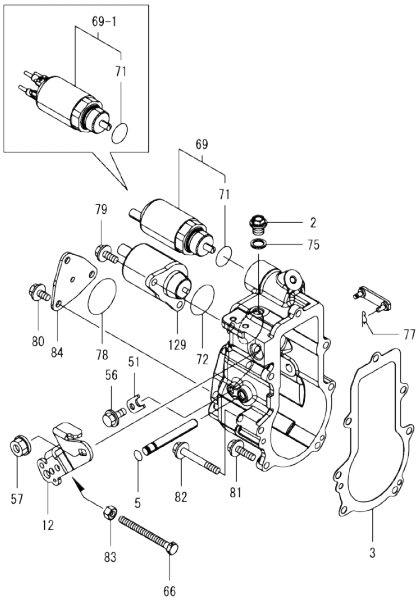

(A)=3TNM74F-SAFS (D)=
(B)= (E)=
(C)= (F)=

No.	Lev.	Parts No.	Description	Q'ty (A)	(B)	(C)	(D)	(E)	(F)	I	R
2	2	119717-51930	PLUG, M10	1							
3	2	119717-61050	GASKET, CASE	1							
5	2	129155-51280	O-RING, S6	1							
12	2	119515-61440	LEVER, CONTROL	1							
51	2	119660-61901	STOPPER, SHAFT	1							
56	2	26106-060102	BOLT, M6X 10 PLATED	1							
57	2	26366-080002	NUT, M8	1							
66	2	171353-61460	BOLT, IDLE LIMIT	1							
69	2	119C00-61900	SOLENOID, CONTROL	1							
69-1	2	119C00-61901	SOLENOID, POWER CONT	1							R
	(A=E22380)										
71	3	24357-240200	PACKING, 24020	1							
72	2	158552-61900	O-RING	1							
75	2	22190-100002	WASHER, SEAL 10	1							
77	2	22372-040000	PIN, SNAP 4	1							
78	2	24341-000360	O-RING, 1AS36.0	1							
79	2	26106-060142	BOLT, M6X 14 PLATED	2							
80	2	26106-060142	BOLT, M6X 14 PLATED	3							
81	2	26106-060202	BOLT, M6X 20 PLATED	4							
82	2	26106-060452	BOLT, M6X 45 PLATED	3							
83	2	26756-060002	NUT, LOCK M6	1							
84	2	158563-61060	COVER, GOVERNOR CASE	1							
129	2	119653-77950	SOLENOID, STOP	1							

Remarks
* This figure(Governor) is incorporated in the Fuel Injection Pump(Fig.10).

N:Old ←Yes/No→ New. Q:Old ←No/Yes→ New. R:Old ←Yes/Yes→ New. S:Old ←No/No→ New. W:Add. Z:Discontinued. F:Interchangeable by set. K:Q'ty Change

Copyright (C) 2014 YANMAR GLOBAL CS CO., LTD. All RightsReserved.

Fig.12. FUEL INJECTION VALVE

(A)=3TNM74F-SAFS
(B)=
(C)=
(D)=
(E)=
(F)=

No.	Lev.	Parts No.	Description	Q'ty (A)	(B)	(C)	(D)	(E)	(F)	I	R
1	1	119C10-53000	NOZZLE ASSY, F.I.	3							
3	2	119C10-53010	NOZZLE ASSY	3							
4	2	129901-53800	SHIM SET, ADJUSTING	3							1
15	1	129150-59120	RETAINER, PIPE	1							
18	2	129150-59131	BOLT, M4X14	2							
20	1	119D00-59810	PIPE ASSY,INJ,NO1	1							
24	1	119D00-59820	PIPE ASSY,INJ,NO2	1							
28	1	119D00-59830	PIPE ASSY,INJ,NO3	1							
32	1	119D00-59540	PIPE ASSY, FO RETURN	1							
33	1	119125-59560	BOLT, PIPE JOINT	1							
34	1	129901-59560	GASKET	3							
35	1	119125-59570	PIPE ASSY, RETURN	1							
36	2	124066-59100	CLIP, HOSE 8	2							
37	2	119000-59550	PIPE, FUEL RETURN	1							
38	1	119840-59570	JOINT	1							
39	1	119620-59700	NUT, NOZZLE	3							
40	1	22190-120002	WASHER, SEAL 12	2							

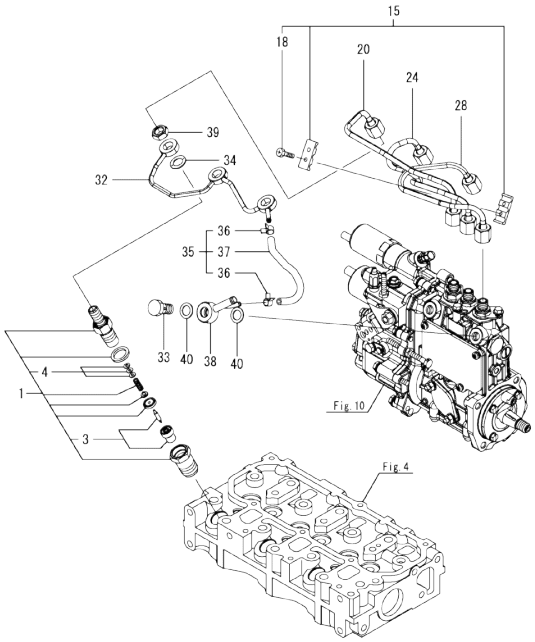

Remarks
(1)Spare parts.

N:Old ◄Yes/No► New. Q:Old ◄No/Yes► New. R:Old ◄Yes/Yes► New. S:Old ◄No/No► New. W:Add. Z:Discontinued. F:Interchangeable by set. K:Q'ty Change

Copyright (C) 2014 YANMAR GLOBAL CS CO., LTD. All RightsReserved.

Fig.13. FUEL FILTER

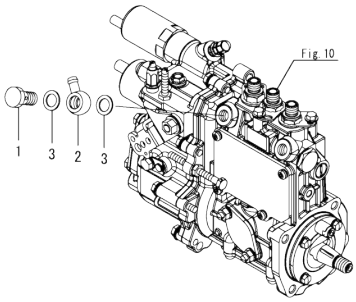

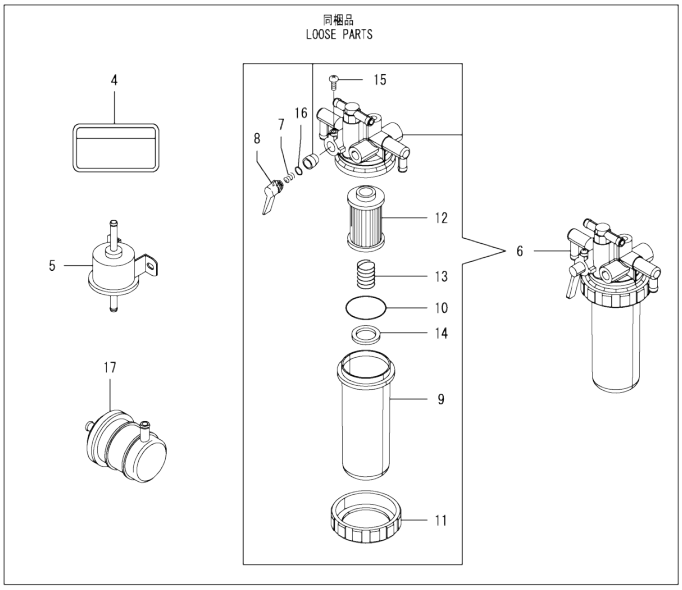

(A)=3TNM74F-SAFS (D)=
(B)= (E)=
(C)= (F)=

No.	Lev.	Parts No.	Description	Q'ty (A)	(B)	(C)	(D)	(E)	(F)	I	R
1	1	103854-39140	BOLT, PIPE JOINT	1							
2	1	101304-59020	JOINT, PIPE 12	1							
3	1	22190-120002	WASHER, SEAL 12	2							
4	1	114110-07761	LABEL, FUEL CAUTION	1							
5	1	119225-52102	PUMP, FUEL FEED	1							
6	1	129053-55621	FILTER ASSY, FUEL	1							
6-1	1	129053-55622	FILTER ASSY, FUEL	1						N	
	(A=E15264)										
7	2	104200-55330	SPRING, FUEL VALVE	1							
8	2	119810-55340	LEVER, FUEL	1							
9	2	129107-55510	CUP, STRAINER	1							
10	2	102103-55520	O-RING, FILTER	1							
10-1	2	129053-55520	O-RING, P44	1						N	
	(A=E15264)										
11	2	110250-55610	RING, CUP RETAINING	1							
12	2	119810-55650	ELEMENT, FUEL FILTER	1							
12-1	2	129053-55670	ELEMENT, FO FILTER	1						N	
	(A=E15264)										
13	2	121257-55720	SPRING, ELEMENT	1							
14	2	121257-55731	FLOAT	1							
15	2	104200-55750	SCREW, M4	1							
16	2	24311-240100	O-RING, 1AP10A	1							
16-1	2	129053-55510	O-RING, P10A	1						N	
	(A=E15264)										
17	1	129052-55630	FILTER, FUEL INLET	1							

N:Old ←Yes/No→ New. Q:Old ←No/Yes→ New. R:Old ←Yes/Yes→ New. S:Old ←No/No→ New. W:Add. Z:Discontinued. F:Interchangeable by set. K:Q'ty Change

Copyright (C) 2014 YANMAR GLOBAL CS CO., LTD. All RightsReserved.

Fig.14. STARTING MOTOR

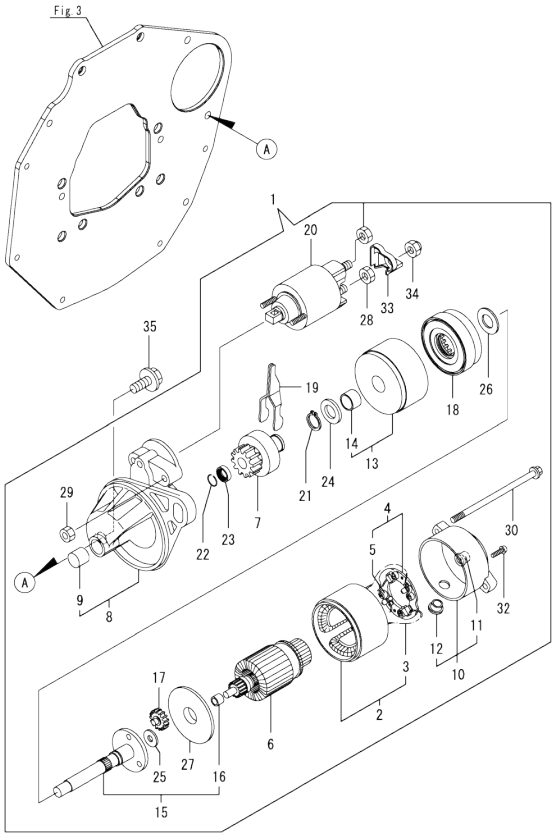

(A)=3TNM74F-SAFS (D)=
(B)= (E)=
(C)= (F)=

No.	Lev.	Parts No.	Description	Q'ty (A)	(B)	(C)	(D)	(E)	(F)	I	R
1	1	119515-77010	STARTER	1							
2	2	X0281007680	YOKE ASSY	1							
3	3	X0280996180	STARTER KIT	2							
4	2	X0285105190	HOLDER ASSY	1							
5	3	X0285205030	SPRING	4							
6	2	X0282005871	ARMATURE ASSY	1							
7	2	X0283006960	CLUTCH ASSY	1							
8	2	X4284001590	HOUSING ASSY	1							
9	3	X9491050100	BEARING, NEEDLE	1							
10	2	X0285007030	FRAME ASSY	1							
11	3	X9491040990	BEARING	1							
12	3	X0280626010	COVER	1							
13	2	X0284105040	BEARING ASSY	1							
14	3	X9491034330	BEARING	1							
15	2	X0286105010	SHAFT ASSY	1							
16	3	X9491034320	BEARING	1							
17	2	X0286305010	GEAR	3							
18	2	X0286355010	GEAR	1							
19	2	X0287405140	LEVER	1							
20	2	X0534007800	SWITCH ASSY	1							
21	2	X9055715000	RING	1							
22	2	X9490721360	RING	1							
23	2	X0280210331	NUT	1							
24	2	X9490138110	WASHER	1							
25	2	X9490138090	WASHER	1							
26	2	X9490138100	WASHER	1							
27	2	X0284525010	PLATE	1							
28	2	X9490562360	NUT	1							
29	2	X9490560750	NUT	2							
30	2	X9490423520	BOLT, THROUGH	2							
32	2	X9490065670	SCREW, M4X6	2							
33	2	X0280335360	COVER, TERMINAL	1							
34	2	X1289510130	NUT	1							
35	1	26106-100252	BOLT, M10X 25 PLATED	2							

N:Old ←Yes/No→ New. Q:Old ←No/Yes→ New. R:Old ←Yes/Yes→ New. S:Old ←No/No→ New. W:Add. Z:Discontinued. F:Interchangeable by set. K:Q'ty Change

Copyright (C) 2014 YANMAR GLOBAL CS CO., LTD. All RightsReserved.

Fig.15. GENERATOR

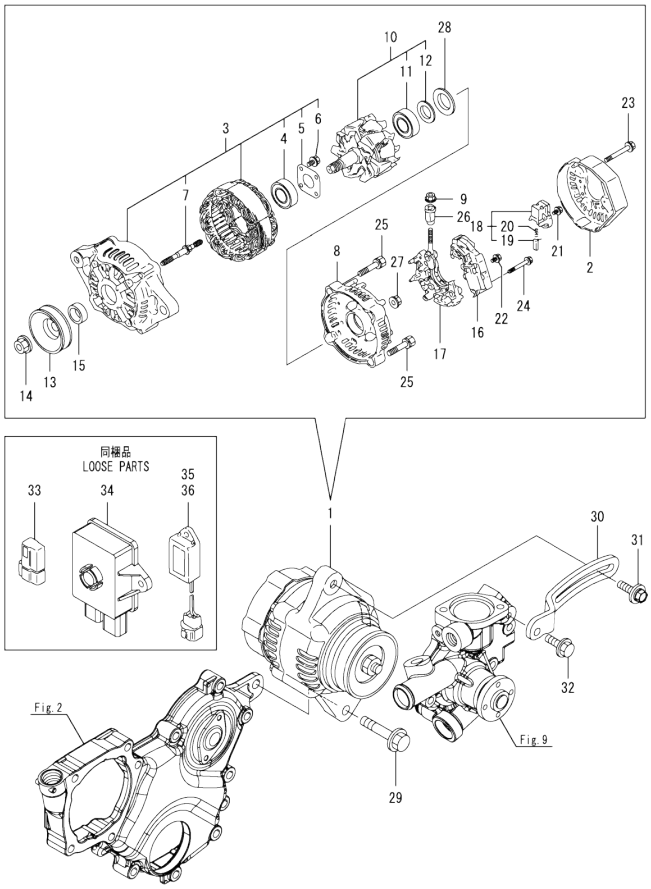

(A)=3TNM74F-SAFS (D)=
(B)= (E)=
(C)= (F)=

No.	Lev.	Parts No.	Description	Q'ty (A)	(B)	(C)	(D)	(E)	(F)	I	R
1	1	119751-77200	GENERATOR, 12V-40AP	1							
2	2	X0215512440	COVER	1							
3	2	X1214001430	FRAME ASSY, DRIVE	1							
4	3	119620-79200	BEARING, BALL	1							
5	3	119620-79210	PLATE, RETAINER	1							
6	3	119620-79220	SCREW	4							
7	3	119620-79230	STUD	2							
8	2	X1215011050	FRAME ASSY	1							
9	2	X9490561001	NUT	1							
10	2	119620-77380	ROTOR ASSY	1							
11	3	119620-79240	BEARING, BALL	1							
12	3	119620-79250	COVER	1							
13	2	119620-77461	PULLEY	1							
14	2	119620-77471	NUT	1							
15	2	119620-77490	COLLAR	1							
16	2	129423-77710	REGULATOR ASSY	1							
17	2	119620-79260	HOLDER	1							
18	2	129052-79270	HOLDER, BRUSH	1							
19	3	119620-77480	BRUSH ASSY	2							
20	3	119620-79280	SPRING	2							
21	2	119620-79290	SCREW	6							
22	2	119620-79300	SCREW	1							
23	2	119620-79310	BOLT	3							
24	2	119620-79320	SCREW	2							
25	2	119620-79330	BOLT	2							
26	2	119620-79340	BUSH, INSULATION	1							
27	2	119620-79350	NUT	2							
28	2	119620-79360	WASHER, THRUST	1							
29	1	26106-100402	BOLT, M10X 40 PLATED	1							
30	1	119717-77330	ADJUSTER	1							
31	1	119810-77340	BOLT, ADJUSTER	1							
32	1	26106-080202	BOLT, M8X 20 PLATED	1							
33	1	119643-66900	DIODE	1							
34	1	119C10-77600	DRIVER	1							
35	1	129155-77925	TIMER	1							
36	1	129211-77920	TIMER	1							

N:Old ←Yes/No→ New. Q:Old ←No/Yes→ New. R:Old ←Yes/Yes→ New. S:Old ←No/No→ New. W:Add. Z:Discontinued. F:Interchangeable by set. K:Q'ty Change

Copyright (C) 2014 YANMAR GLOBAL CS CO., LTD. All RightsReserved.

Parts No. Index

Parts No.	Fig. No.	Ref. No.
101304-59020	13	2
102103-55520	13	10
103854-39140	13	1
104200-55330	13	7
104200-55750	13	15
105010-11490	4	3
106760-01770	2	6
110250-55610	13	11
114110-07761	13	4
114250-39450	8	13
119000-59550	12	37
119025-01500	2	1
119025-01690	3	5
119025-01760	3	4
119025-14580	6	3
119025-21570	7	13
119025-25100	6	9
119025-42000	9	1
119025-42020	9	3
119025-42030	9	4
119027-34830	8	4
119028-35080	8	8
119125-01750	2	2
119125-01790	1	32
119125-01800	1	33
119125-01960	1	7
119125-01970	1	5
119125-02061	1	9
119125-02900	1	36
119125-02910	1	39
119125-02930	1	23
119125-02940	1	42
119125-21200	7	4
119125-21660	7	7
119125-25050	1	26
119125-25910	6	15
119125-25930	6	13
119125-32000	8	1
119125-34810	8	3
119125-39200	8	10
119125-39220	8	11
119125-51700	10	77
119125-51800	1	35
119125-59560	12	33
119125-59570	12	35
119127-01600	3	2
119131-18320	5	5
119209-35030	8	7
119225-52102	13	5
119285-11990	4	11

Parts No.	Fig. No.	Ref. No.
119305-35151	8	14
119515-11200	4	20
119515-11240	4	21
119515-11280	4	25
119515-11310	4	44
119515-11320	4	45
119515-11330	4	46
119515-11380	4	34
119515-11800	4	57
119515-13200	5	7
119515-14400	6	2
119515-23000	7	24
119515-23601	7	28
119515-23611	7	31
119515-42020	9	12
119515-61440	11	12
119515-77010	14	1
119600-11460	4	2
119620-01620	1	13
119620-02450	6	4
119620-14200	6	1
119620-21500	7	12
119620-59700	12	39
119620-77380	15	10
119620-77461	15	13
119620-77471	15	14
119620-77480	15	19
119620-77490	15	15
119620-79200	15	4
119620-79210	15	5
119620-79220	15	6
119620-79230	15	7
119620-79240	15	11
119620-79250	15	12
119620-79260	15	17
119620-79280	15	20
119620-79290	15	21
119620-79300	15	22
119620-79310	15	23
119620-79320	15	24
119620-79330	15	25
119620-79340	15	26
119620-79350	15	27
119620-79360	15	28
119621-21681	7	8
119643-66900	15	33
119653-77950	11	129
119660-61901	11	51
119685-42281	9	8
119717-01800	2	3

Parts No.	Fig. No.	Ref. No.
119717-03031	4	35
119717-03070	4	36
		37
119717-11131	4	15
119717-11190	4	17
119717-11260	4	24
119717-11340	4	18
119717-11350	4	19
119717-11650	4	26
119717-13110	5	2
119717-13600	5	3
119717-22300	7	22
119717-23200	7	27
119717-23910	7	30
119717-35140	8	5
119717-42350	9	16
119717-44740	9	18
119717-49800	9	22
119717-51150	6	14
119717-51420	10	33
119717-51711	10	78
119717-51750	10	79
119717-51761	10	80
119717-51860	10	94
119717-51930	11	2
119717-61050	11	3
119717-77330	15	30
119717-77801	4	55
119717-77820	4	56
119718-13100	5	1
119734-02220	1	34
119751-77200	15	1
119802-03100	4	38
119802-03110	4	39
119802-03121	4	40
119802-03131	4	41
119802-03141	4	42
119802-13620	5	4
119810-01200	1	30
119810-55340	13	8
119810-55650	13	12
119810-77340	15	31
119840-59570	12	38
119C00-61900	11	69
119C00-61901	11	69 -1
119C10-01330	1	31
119C10-11100	4	13
119C10-11110	4	14
119C10-21930	7	9
119C10-21940	7	10

Parts No.	Fig. No.	Ref. No.
119C10-22500	7	18
119C10-22550	7	34
119C10-53000	12	1
119C10-53010	12	3
119C10-77600	15	34
119D00-01560	1	1
119D00-11740	4	4
119D00-21700	7	1
119D00-22080	7	16
119D00-22900	7	33
119D00-51250	10	100
119D00-59540	12	32
119D00-59810	12	20
119D00-59820	12	24
119D00-59830	12	28
121250-44901	9	27
121256-44600	9	36
121257-55720	13	13
121257-55731	13	14
121267-44760	9	19
121450-42450	9	26
122710-51090	10	8
124060-01050	1	4
124060-21600	7	15
124066-59100	12	36
124101-49531	9	21
124160-01751	4	33
124450-44510	9	30
124450-44530	9	32
124450-44550	9	35
124450-44560	9	33
124465-44950	9	28
		29
129052-55630	13	17
129052-79270	15	18
129053-55510	13	16 -1
129053-55520	13	10 -1
129053-55621	13	6
129053-55622	13	6 -1
129053-55670	13	12 -1
129100-01580	3	1
	7	2
129100-52200	10	98
129107-55510	13	9
129150-11230	4	27
129150-11750	4	29
129150-25301	6	12
129150-59120	12	15
129150-59131	12	18
129155-51020	10	5

Parts No. Index

Parts No.	Fig. No.	Ref. No.
129155-51280	10	18
	11	5
129155-51400	10	31
129155-51580	10	44
129155-52051	10	97
129155-77925	15	35
129211-77920	15	36
129423-77710	15	16
129508-11180	4	16
129900-07900	4	53
129900-32040	1	27
129901-11450	4	1
129901-53800	12	4
129901-59560	12	34
158552-61900	11	72
158563-61060	11	84
158600-51410	10	32
158600-51420	10	34
158600-51570	10	43
158600-51790	10	81
171056-49120	9	25
171353-61460	11	66
22190-100002	11	75
22190-120002	12	40
	13	3
22190-160002	3	7
	10	83
22217-120000	10	84
22242-000120	4	30
22252-000220	7	23
22351-050010	10	85
22351-060012	1	28
22372-040000	11	77
22512-040120	7	5
22512-050120	7	11
22857-500100	4	47
		48
22857-500160	4	49
23061-070230	9	34
23414-080000	9	13
23876-005000	1	10
	4	12
24311-000180	2	7
24311-000320	4	50
24311-240100	13	16
24341-000360	11	78
24357-240200	11	71
25132-003500	9	17
26022-050122	10	89
26106-060102	8	9

Parts No.	Fig. No.	Ref. No.
26106-060102	11	56
26106-060122	6	8
	8	12
26106-060142	8	2
	11	79
		80
26106-060202	4	51
	11	81
26106-060302	9	20
26106-060352	3	8
26106-060402	1	29
26106-060452	11	82
26106-060752	4	52
26106-080122	9	14
26106-080162	4	54
	10	101
		102
26106-080202	15	32
26106-080252	9	23
26106-080352	2	4
26106-080402	4	32
26106-080452	2	5
	9	15
26106-080652	9	24
26106-100252	14	35
26106-100402	15	29
26206-100202	3	3
26306-080002	5	6
26366-080002	11	57
26577-060122	9	10
26716-120002	10	91
26756-060002	11	83
26979-050162	4	31
27241-300000	1	11
27241-450000	1	12
719D25-51300	10	1
X0215512440	15	2
X0280210331	14	23
X0280335360	14	33
X0280626010	14	12
X0280996180	14	3
X0281007680	14	2
X0282005871	14	6
X0283006960	14	7
X0284105040	14	13
X0284525010	14	27
X0285007030	14	10
X0285105190	14	4
X0285205030	14	5
X0286105010	14	15

Parts No.	Fig. No.	Ref. No.
X0286305010	14	17
X0286355010	14	18
X0287405140	14	19
X0534007800	14	20
X1214001430	15	3
X1215011050	15	8
X1289510130	14	34
X4284001590	14	8
X9055715000	14	21
X9490065670	14	32
X9490138090	14	25
X9490138100	14	26
X9490138110	14	24
X9490423520	14	30
X9490560750	14	29
X9490561001	15	9
X9490562360	14	28
X9490721360	14	22
X9491034320	14	16
X9491034330	14	14
X9491040990	14	11
X9491050100	14	9

Parts No.	Fig. No.	Ref. No.